Silicone Glazing Seal Profiles

RCGS5.9X10.9S

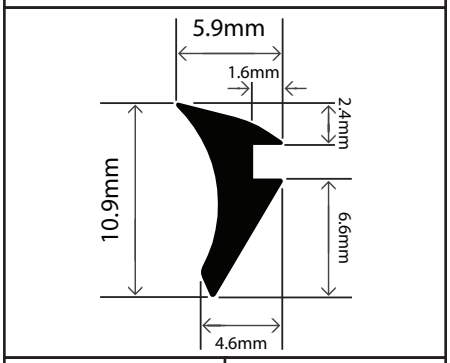

Width (mm)	Height (mm)
5.9	10.9

RCGS6X13S

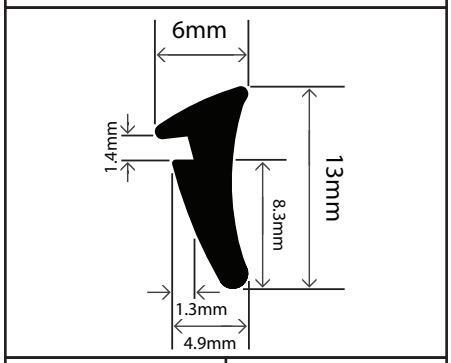

Width (mm)	Height (mm)
6	13

RCGS7.8X11S

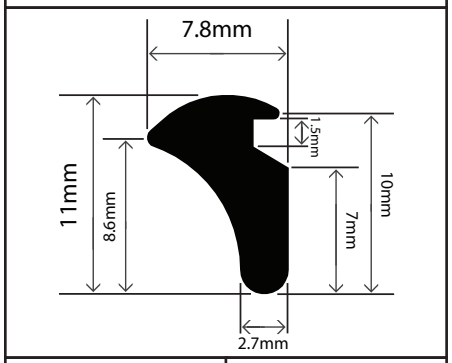

Width (mm)	Height (mm)
7.8	11

RCGS20X28S

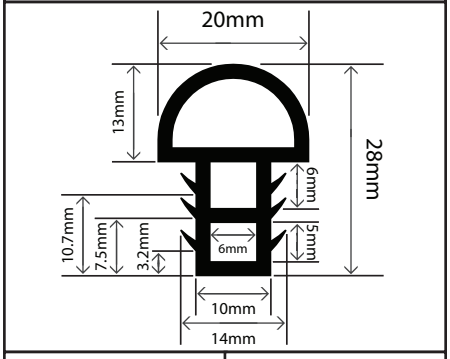

Width (mm)	Height (mm)
20	28

RCGS21X25.4S

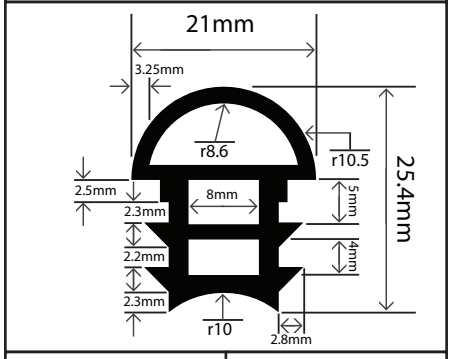

Width (mm)	Height (mm)
21	25.4

RCGS24X12.3S

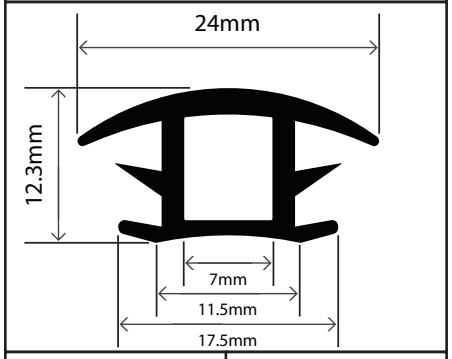

Width (mm)	Height (mm)
24	12.3

E-mail: sales@rubbermanufact.com Http://www.rubbermanufact.com TeL:+86 18005162255
Nanjing YuHangrubber company limited in China Jiangshu